镜头
使用说明书

SAMSUNG 18-200 mm F3.5-6.3 ED OIS

此说明书专门为指导您了解镜头基本功能和特征而设计。
为保证安全、正确地使用，请仔细阅读此说明书。

AD68-08136A (1.1)

A

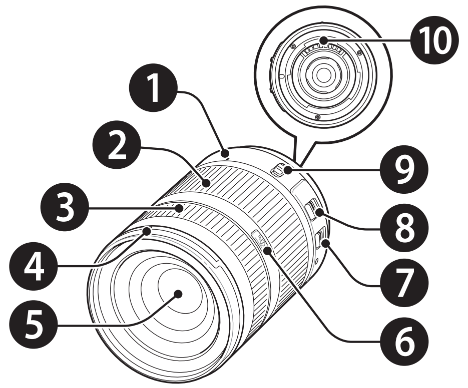

B

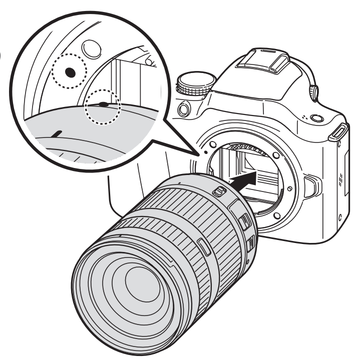

E

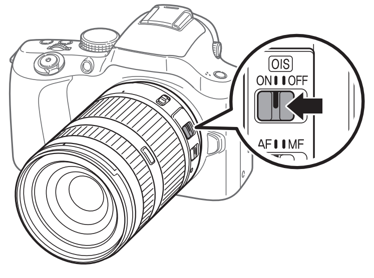

C

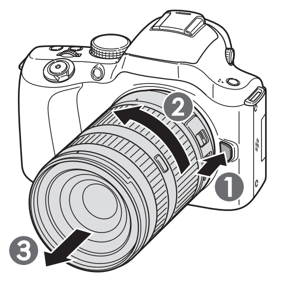

F

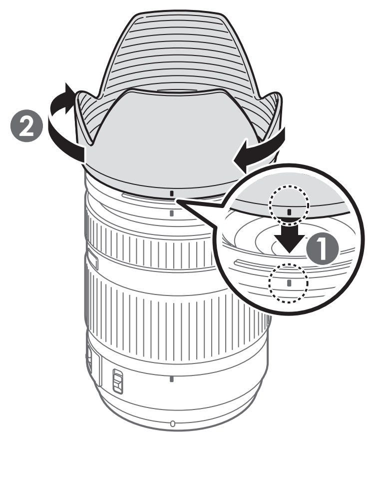

D

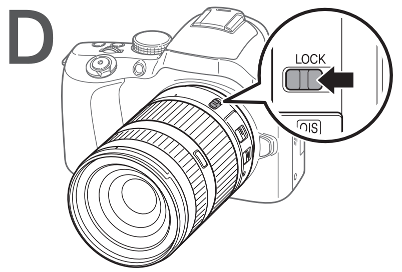

简体中文

使用本产品前

感谢您购买三星镜头。根据相机型号不同，此说明书中描述的一些功能可能不可用。更新相机机身和镜头的固件。请访问 www.samsung.com 以下载固件。

拆开包装

镜头、镜头盖、镜头接口盖、遮光罩、镜头包、使用说明书

- **另购项目**：滤光镜

各部位名称（见图 A）

❶ 镜头连接指示 ❷ 变焦圈 ❸ 对焦圈 ❹ 镜头盖接口指示 ❺ 镜头 ❻ i-Function 按钮 ❼ AF/MF 开关 ❽ OIS 开关 ❾ 变焦锁定开关 ❿ 镜头信息触点

连接和移除镜头

▶ 要安装镜头，

1 卸下镜头盖、镜头接口盖和机身盖。

2 将相机机身红色标记对准镜头红色标记。然后如图所示旋转镜头，直到其锁定到位。（见图 B）

▶ 要卸下镜头，按住镜头释放按钮，然后如图所示旋转镜头。（见图 C）

设置对焦方式

将镜头上的 AF/MF 开关置于 **AF** 或 **MF**。

使用自动对焦 (AF)：半按［**快门**］按钮，自动对焦。

> 相机在使用自动对焦（AF）时请勿对镜头前端太过用力。否则可能会导致镜头故障。

使用手动对焦 (MF)：可以旋转镜头上的对焦环来手动调整对焦。

> 设定 MF 辅助功能以协助手动对焦。有关更多详细信息，请参阅相机说明书。

使用 i-Function

按下镜头上的 i-Function 按钮时，可以使用 ⓘ**effect** 模式或 ⓘ**zoom**，或者调整某些拍摄选项。在 ⓘ**effect** 模式中，可以选择相机支持的场景或滤镜效果。相对于数码变焦，ⓘ**zoom** 在放大时照片画质损失更少。只有当您的相机支持此功能时可用。i-Scene 模式仅适用于部分相机型号。

1 将模式旋钮旋转到 **P**、**A**、**S**、**M** 或 ⓘ。

2 按镜头上的［**i-Function**］选择一个设置。
- 可用设置可能因拍摄模式不同而异。

设置	拍摄模式
ⓘeffect	ⓘ
ⓘzoom	P、A、S、M、ⓘ
快门速度	S、M

设置	拍摄模式
光圈值	A、M
曝光值	P、A、S
白平衡、ISO	P、A、S、M

3 旋转镜头上的对焦环来调整设置（或在 ⓘ**zoom** 模式中更改变焦率）。

4 对焦并拍摄相片。

> - 若想选择在您按下镜头上的 i-Function 按钮时显示的项目，可使用相机上的 **iFn 自定义**菜单。
> - ⓘ**effect** 模式中的可用场景或滤镜效果可能会因相机型号不同而异。
> - 如果选择 ⓘ**zoom**，照片的分辨率将根据变焦率而有所不同。

使用变焦圈

旋转镜头上的变焦环设置相片的 构图（镜头的焦距）。

> 由于更改焦距会造成对焦的轻微改变，所以调整变焦 圈改变焦距后，建议拍照前重新调整对焦。

锁定变焦（见图 D）

设定变焦锁定以保持镜头视角一致。

> 若要设置变焦锁，请转动变焦环，直到•焦距达 18 mm，然后将开关推到左侧。

使用光学图像稳定（OIS）功能（见图 E）

通过使用 OIS 功能，用户可以尽可能的减小相机震动。
设定镜头的 OIS 开关设定为 **ON**。

使用镜头遮光罩（见图 F）

若要避免影像画质因不必要的光线遮挡而变差，请使用镜头罩。

> 在拍摄对象与相机之间距离较近的情况下使用闪光灯，闪光灯光线可能会被镜头或镜头遮光罩部分遮挡。为确保获得适当的光照，请卸下镜头遮光罩或调整相机和拍摄对象之间的距离。

使用滤光镜（另购）

将滤光镜连接在镜头上之前，请确保滤光镜与镜头兼容。关于兼容的滤光镜尺寸，请参考“规格”。

> - 滤光镜是精密的光学设备，注意避免灰尘、污垢和划伤。 不要将两个或两个以上滤光镜同时安装在镜头上，否则会损坏图像的质量并造成光晕（镜头的视角被遮挡造成的图像边缘亮度或饱和度损失）。
> - 如果使用广角镜头和较厚的滤光镜，影像可能会发暗。

规格

镜头名称 SAMSUNG 18-200 mm F3.5-6.3 ED OIS

- **焦距**：18 - 200 mm （在 35 mm 格式中相当于 27.7 - 308 mm）
- **镜头构成**：13 组，18 元件（附带 3 个非球面镜头、2 个低色散镜头）
- **视角**：75.9 - 8.0°
- **光圈**：F3.5 - 6.3（最小：F22），（叶片数：7、圆孔径光栏）
- **接口类型**：三星 NX 接口（NX 系列专用）
- **光学图像稳定**：支持
- **最小对焦范围**：0.50 m
- **最大放大倍率**：约 0.28 X
- **i-Scene 模式**：支持 （人像、儿童、运动、逆光、风景、夕阳、黎明、夜景）
- **i-Setting**：支持
- **镜头遮光罩**：附带
- **滤光镜尺寸**：67 mm
- **最大直径 X 长度**：72 X 105.5 mm
- **重量**：约 549 g（不包括遮光罩）
- **操作温度**：0 - 40°C
- **操作温度**：5 - 85 %

健康与安全信息

使用镜头前请仔细阅读下列安全注意事项。

警告
- 不要通过镜头或相机看太阳。否则可能会严重损伤您的眼睛。
- 使您的镜头或相机远离儿童和宠物。

注意
- 不要在未安装镜头盖的情况下，将镜头放在阳光直射的地方。直射的阳光通过镜头后聚焦在易燃物上可能导致火灾。
- 请仅使用坚固的三脚架。轻型或不稳定的三脚架可能会倒塌并损坏相机。

镜头的存储和维护

- 请在干燥、通风的地方存放镜头。
- 请勿将镜头存放在温度或湿度过高的区域，或者放置于壁橱、车辆或存放化学品的密闭区域。
- 镜头没有防水功能，在水附近使用时，小心不要弄湿镜头。
- 不要使用任何化学药品如稀释剂、酒精或苯擦镜头的灰尘。
- 镜头是精密光学设备，小心不要掉落或受到其他物体的撞击。
- 避免在温度频繁变化的地方使用镜头，将镜头放在塑料袋或相机包，防止镜头内外会产生水珠。
- 携带或不使用镜头时，请在镜头上装上镜头盖或镜头接口盖，以免镜头被异物污染或被划伤。
- 不要把没带镜头盖的相机放在三脚架上，相机内部零件可能被直射的阳光损坏。
- 为保持镜头性能，每一年或两年检查一次。
- 不要对镜头前面施加外力。
- 为了安全地使用镜头，请在电源关闭的状态下安装或拆卸镜头。
- 对于使用其他公司镜头造成的任何损坏，三星不承担任何责任。
- 在安装镜头时，确保仅在清洁的环境更换镜头并且不要将手指伸到镜头接口中。如果有异物进入相机机身或镜头，可能会影响拍摄效果或导致故障。
- 请勿在镜头管的任何部分伸出时运送或存放镜头。 旋转镜头上的变焦环将镜头管完全缩回机身内。

Planet First RoHS Compliant

PlanetFirst 体现三星通过生态导向业务与管理活动，对于持续发展与社会责任的承诺。

☐ 产品名：镜头(Lens)
☐ 环保使用期限:10年
— 只有按照本产品使用说明书中的方法正常使用时，环保使用期限才能有效

部件名称	有毒有害物质或元素					
	铅 (Pb)	汞 (Hg)	镉 (Cd)	六价铬 (Cr6+)	多溴联苯 (PBB)	多溴二苯醚 (PBDE)
镜头/LENS	×	○	○	○	○	○

○：表示该有毒有害物质在该部件所有均质材料中的含量均在SJ/T 11363-2006规定的限量要求以下。

×：表示该有毒有害物质至少在该部件的某一均质材料中的含量超出SJ/T 11363-2006规定的限量要求。

注：超过限量要求的部件皆因全球技术发展水平而无法实现有毒有害物质或元素的替代，但是 Samsung 正为了开发替代技术而努力。(资料公开基准:供应商提供的成绩书，Samsung 检测结果)

中国制造 天津三星光电子有限公司
中国 天津津港公路微电子工业区张衡道9号

保留备用

A

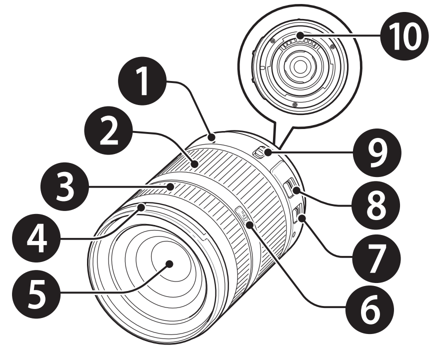

B

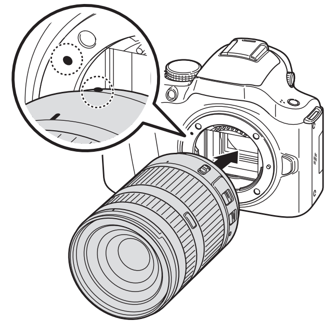

C

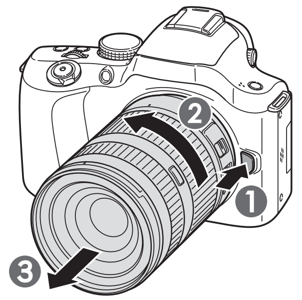

D

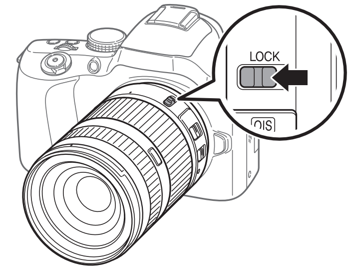

E

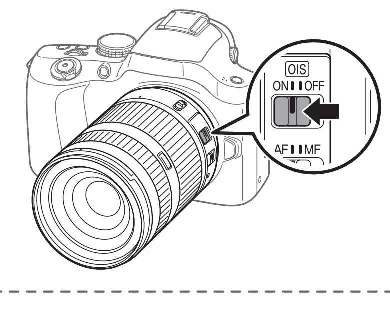

F

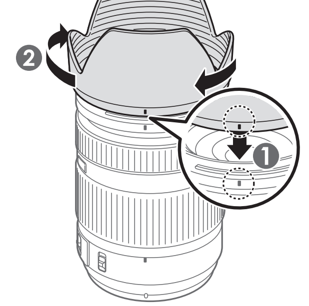

Before Using This Device

Thank you for purchasing the Samsung Lens. Some functions described in this manual may not be available depending on the camera model. Update the firmware of the camera body and lens. Visit www.samsung.com to download the firmware.

Unpacking

Lens, Lens cap, Lens mount cover, Hood, Case, User manual

- **Optional Item**: Filter

Layouts (See illustration A)

❶ Lens mount index ❷ Zoom ring ❸ Focus ring
❹ Lens hood mount index ❺ Lens ❻ i-Function button
❼ AF/MF switch ❽ OIS switch ❾ Zoom lock switch
❿ Lens information contacts

Attaching and Removing the Lens

► To attach the lens,

1 Remove the lens cap, lens mount cover, and body cap.
2 Align the red mark on the lens with the red mark on the camera body. Then, rotate the lens as shown in the illustration until it locks into place. (See illustration B)

► To remove the lens, press and hold the lens release button, and then rotate the lens as shown in the illustration. (See illustration C)

Setting the Focus Method

Set the AF/MF switch on the lens to **AF** or **MF**.

Auto Focus (AF): The focus is adjusted automatically when you half-press [**Shutter**].

> ⚠ Do not apply excessive force to the front of the lens while the camera is using auto focus (AF). Doing so may cause the lens to malfunction.

Manual Focus (MF): The focus can be adjusted manually by rotating the focus ring.

> Use the MF Assist function on the camera to aid with manual focusing. Refer to your camera manual for more details.

Using i-Function

When you press the i-Function button on the lens, you can use the ⓘ effect mode or ⓘ zoom or adjust some shooting options. In the ⓘ effect mode, you can select scenes or filter effects that your camera supports. ⓘ zoom allows you to zoom in on a subject with less degradation of photo quality than the Digital zoom. This feature is available only when your camera supports it. i-Scene mode is available only on some camera models.

1 Rotate the mode dial to **P**, **A**, **S**, **M**, or ⓘ.
2 Press [**i-Function**] on the lens to select a setting.

- Available settings may differ depending on the shooting mode.

Setting	Shooting mode	Setting	Shooting mode
ⓘ effect	ⓘ	Aperture value	A, M
ⓘ zoom	P, A, S, M, ⓘ	Exposure value	P, A, S
Shutter speed	S, M	White Balance, ISO	P, A, S, M

3 Rotate the focus ring on the lens to adjust the setting (or to change the zoom rate in ⓘ zoom mode).
4 Focus and capture the photo.

> - To select the items that will appear when you press the i-Function button on the lens, you can use the **iFn Customizing** menu on your camera.
> - Available scenes or filter effects in the ⓘ effect mode may vary depending on the camera model.
> - If you select ⓘ zoom, the photo resolution will vary according to the zoom rate.

Using the Zoom Ring

Set the composition of the photo (the focal distance of the lens) by rotating the zoom ring on the lens.

> When you use the zoom function, focus can be slightly changed. Adjust the focus again before you capture a photo.

Locking the zoom (See illustration D)

Set the zoom lock to keep the viewing angle of the lens constant.

> To set the zoom lock, turn the zoom ring until the focal length reaches 18 mm, and then push the switch left.

Using the Optical Image Stabilization (OIS) Function (See illustration E)

The user can minimize the shaking of camera by using the OIS function. Set the OIS switch on the lens to **ON**.

Using a Lens Hood (See illustration F)

To prevent deterioration of image quality by blocking out unnecessary light, use a lens hood.

> When you use a flash in situations where the distance between the subject and the camera is close, the flash light may be partially blocked by the lens or a lens hood. To ensure proper lighting, remove the lens hood or adjust the distance between the camera and subjects.

Using a Filter (optional)

Before putting a filter on the lens, make sure it is compatible. Refer to "Specifications" for compatible filter size.

> ⚠
> - A filter is a precise optical product. Keep away from dust, dirt or scratches. Also, do not try to mount two or more filters at the same time. Doing so may deteriorate the image quality and cause vignetting (a reduction of an image's brightness or saturation at the periphery as the viewing angle of the lens is hidden).
> - In case of a thick framed filter, the vignetting can occur with a wide-angle lens.

Specifications

Lens Name	SAMSUNG 18-200 mm F3.5-6.3 ED OIS

- **Focal length**: 18–200 mm (equivalent to 27.7–308 mm in 35 mm format)
- **Elements in Group**: 18 elements in 13 groups (3 aspheric lens, 2 Extra-low Dispersion lens included)
- **Angle of View**: 75.9°–8.0°
- **Aperture**: F3.5–6.3 (Minimum: F22), (Number of Blades: 7, Circular Aperture Diaphragm)
- **Mount Type**: Samsung NX mount (Exclusive to NX series)
- **Optical Image Stabilizer**: Supported
- **Minimum Focus Distance**: 0.50 m
- **Maximum Magnification**: Approx. 0.28X
- **i-Scene Mode**: Supported (Portrait, Children, Sports, Backlight, Landscape, Sunset, Dawn, Night)
- **i-Setting**: Supported
- **Lens Hood**: Included
- **Filter Size**: 67 mm
- **Max. Diameter X Length**: 72 X 105.5 mm
- **Weight**: Approx. 549 g (without hood)
- **Operating Temperature**: 0–40 °C
- **Operating Humidity**: 5–85 %

Health and Safety Information

Please read the following safety tips carefully for proper and safe use.

Warning	• Do not stare at the sun through the lens or camera. This may cause severe damage to your eyes. • Keep your lens or camera away from small children and pets.
Caution	• Do not store the lens in direct sunlight without the lens cap. Direct sunlight that passes through the lens may combust if it comes into contact with flammable materials. • Use only sturdy tripods. Lightweight or unstable tripods may fall over and damage the camera.

Lens Storage and Maintenance

- Store the lens in dry and well ventilated areas.
- Do not store the lens in areas of high temperature or humidity or in a closet, car, or confined area where chemicals are stored.
- The lens is not waterproof. Be careful not to allow it to get wet when using it near water.
- Do not use chemicals such as thinner, alcohol, or benzene to remove dust.
- Do not drop the lens or apply excessive shock to it. The lens is a precise optical product.
- Avoid using the lens anywhere there is a sudden temperature change. Keep the lens in a plastic bag or a camera case to prevent condensation from forming on the inside or outside of the lens.
- When carrying or not using the lens, place the lens cap and lens mount cover on the lens to prevent contamination from foreign particles and protect the lens from scratches.
- Do not keep the camera mounted on a tripod without the lens cap. The inside of the camera can be damaged by direct sunlight.
- Check the lens once every year or two for best performance.
- Do not apply excessive force to the front of the lens.
- For safe use of the lens, mount or dismount the lens while the camera is turned off.
- Samsung is not responsible for any damage incurred by using other manufacturers' lenses.
- Make sure to change lenses only in a clean environment and do not put your fingers into the lens mount when mounting the lens. Foreign particles may affect shooting results or cause a malfunction if they enter the camera body or the lens.
- Do not transport or store the lens with any part of the tube is extended. Completely retract the lens tube inside the body by rotating the zoom ring on the lens.

Correct Disposal of This Product
(Waste Electrical & Electronic Equipment)
(Applicable in countries with separate collection systems)

This marking on the product, accessories or literature indicates that the product and its electronic accessories (e.g. charger, headset, USB cable) should not be disposed of with other household waste at the end of their working life. To prevent possible harm to the environment or human health from uncontrolled waste disposal, please separate these items from other types of waste and recycle them responsibly to promote the sustainable reuse of material resources. Household users should contact either the retailer where they purchased this product, or their local government office, for details of where and how they can take these items for environmentally safe recycling. Business users should contact their supplier and check the terms and conditions of the purchase contract. This product and its electronic accessories should not be mixed with other commercial wastes for disposal.

PlanetFirst RoHS Compliant

PlanetFirst represents Samsung Electronics' commitment to the sustainable development and social responsibility through eco-driven business and management activities.

Please refer to the warranty that came with your product or visit our website www.samsung.com for after-sales service or inquiries.